MECHANICAL DESIGN THAT SIMPLIFIES AND SOLVES PROBLEMS

Many people know of Pentronic's expertise in temperature and measuring technology. However, not everyone knows that Pentronic also has a large mechanical design department plus its own machines for processing metal and plastic using CNC technology.

THIS ENABLES PENTRONIC not only to discover but also to implement solutions to a whole range of problems that not infrequently involve the mounting and accessibility of temperature sensors within existing installations. These installations might be old but are in good condition, even though their sensors need replacing or removing for calibration. Nowadays, when companies replace their sensors there are many opportunities to choose simpler, smarter and even cheaper alternatives than those that were possible when the original installation was designed. Customers often also want to add many more measuring positions to their process than they originally had, often in locations that are inaccessible or totally enclosed.

Retrofitting existing thermowells

Threaded connectors, for example in thermowells, can be problematic and are not always necessary. The threading makes it time consuming to replace the sensor, and if the threads have also been exposed to corrosion or contamination, they can cause a lot of trouble. To simplify replaceability and save both space and money, Pentronic is therefore developing simple adaptors that can either be screwed permanently into the thermowell or can even be welded into place. It is also possible to have adaptors with a spring-loaded bayonet connector. This is a very easy way to get a connector that is not only far easier to attach and remove, but the spring loading also ensures that the sensor is situated correctly in the thermowell, thereby improving measurement accuracy and response time.

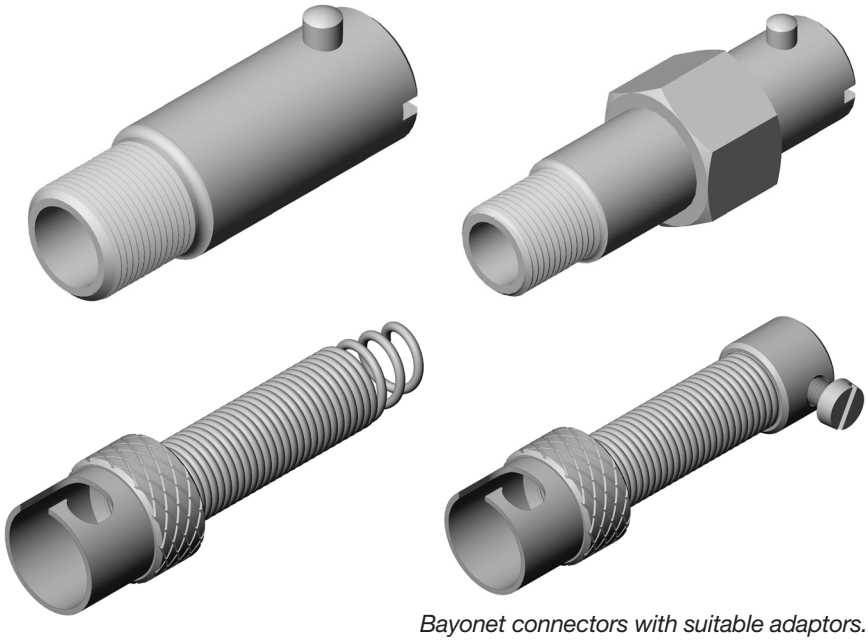

Bayonet connectors with suitable adaptors.

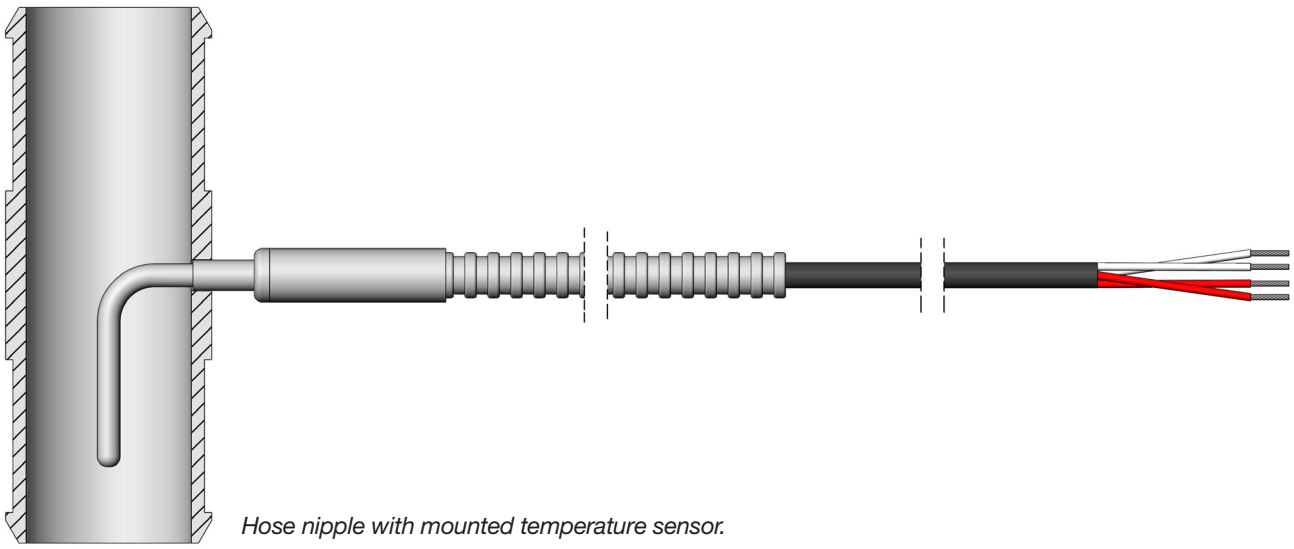

Hose nipple with mounted temperature sensor.

An assembly with optimal measurement performance

Pentronic often manufactures sensors that are finished and mounted in a pipe, ready for installation in the customer's process. The advantage of having this done by Pentronic is that it ensures the sensor has the correct angle and insertion depth in the pipe to achieve the optimal measurement performance. It can also guarantee that handling and processes like welding do not affect the sensor's quality. In many cases, it is complicated and expensive to make these products. Pentronic therefore also offers various dimensions of pipe adaptors for these sensors, making it possible to install the sensors in pipe systems of varying diameters. The adaptors allow customers to select a standardised product without compromising measurement accuracy, and enables Pentronic to provide faster delivery times.

Left: Thermowell with a screw connector where an adapter makes a bayonet connection possible.
Centre: Thermowell and sensor with a bayonet connector.
Right: Traditional thermowell with threading and a sensor with terminal head. Note the neck length, which is long to protect the transmitter inside the terminal head from heat.

Use terminal heads where they're needed!

Today's process industry uses many terminal heads, and companies do not always consider that more suitable alternatives may exist. A terminal head is used either to protect a transmitter or to simplify the connection of cables that lead to the control system and transmitter. Sometimes, though, there is no transmitter inside the terminal head, and it is difficult to screw leads into the terminal head. There are many advantages of reconsidering whether your sensors really need to be designed with a terminal head. Without one, the sensor will be smaller and easier to handle, it will normally be cheaper, and, not least, it will be much less predisposed to shake apart due to the heavy, unbalanced construction involving a terminal head. If you also design your sensor with a plug connector, the connection will be very fast and easy. Contact us for advice about precise and cost-effective solutions for temperature measurement in your process.

Pt100 sensor with connector.